GF Piping Systems

Direct Acting Pressure Reducing Valve

Type 1319/1339

NSF Lead Free

When performance counts

Features

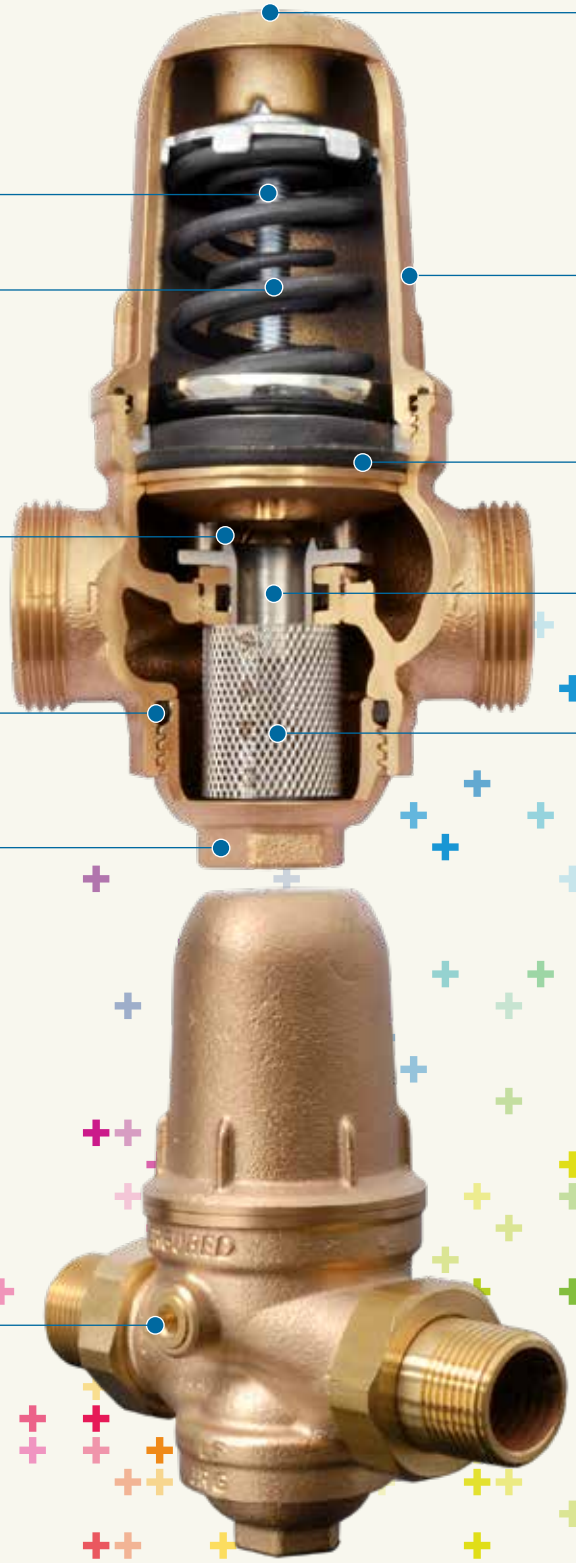

+GF+

The Type 1319/1339 is a compact direct-acting pressure reducing valve for water systems. The PRVs are available in sizes ½" to 2½".

It is recommended to install a Y strainer upstream of the pressure reducing valve, limiting debris problems.

The new patented design consists of a modular design and floating seat.

Accurate downstream pressure settings from 28–140 psi can be easily adjusted to meet system hydraulic requirements. The valve can accept water temperatures up to 158°F.

Operating Parameters

Type	Maximum Inlet Pressure Range (psi)	Outlet Pressure Range (psi)	Preset (psi)
1319 (1318)	357	28-85	56
1339 (1338)	357	80-140	80

Advantages

- Excellent control characteristics, even at low flow rates
- Minimal pressure drop
- Choice of two pressure control ranges
- Easy cleaning of internal mesh strainer
- Compact valve body design
- Pressure gauge port standard on both sides; ideal when installed in confined spaces or up against a wall
- Light weight
- Complies with NSF 61 and NSF 372
- Inlet pressure up to 357 psi - standard
- Double union end connections - standard; allows for quick and easy installation
- Bronze cover - standard
- Elastomeric "permaphragm" diaphragm self-compensates for wear over time
- In buried applications, install valve within a valve box and waterproof cover. Seal the valve by adding PTFE tape to the plug that covers the pressure adjustment screw.

Specification

Provide a direct acting pressure reducing valve capable of handling inlet pressures up to 357 psi. Valve shall consist of a bronze valve cover threaded to a brass body, pressure adjustment screw, 416 stainless steel floating seat, EPDM seal with Elastomeric diaphragm and internal stainless steel strainer (1000 micron). The wetted surfaces of the valve in contact with consumable water shall contain less than 0.25% of lead by weight and be certified to NSF/ANSI 372. Install pressure reducing valve, with double union end connections, in an easily accessible location for maintenance and in accordance with all applicable codes and standards. Tapped and plugged for downstream pressure gauge. It is recommended to install a "Y" strainer upstream of the pressure reducing valve. Pressure reducing valve shall comply with ASSE Standard 1003. Pressure reducing valve shall be GF Piping Systems' Model 1319 LF or 1339 LF.

Installation

For access to the internal strainer, 2"clearance is required to remove cup.

Always flush the piping system before installing the PRV.

Allen key size for adjustment

Nominal size (inch)	⬡
½ and ¾	5 mm
1 and 1¼	6 mm
1½, 2, 2½	8 mm

Allen key is not supplied with the valve.

One 360° turn of the Allen key corresponds to a pressure change of:

Valve Size	Type 1319 (28-85 psi)	Type 1339 (80-140 psi)
½	5.0 psi	5.0 psi
¾–2½	4.3 psi	4.3 psi

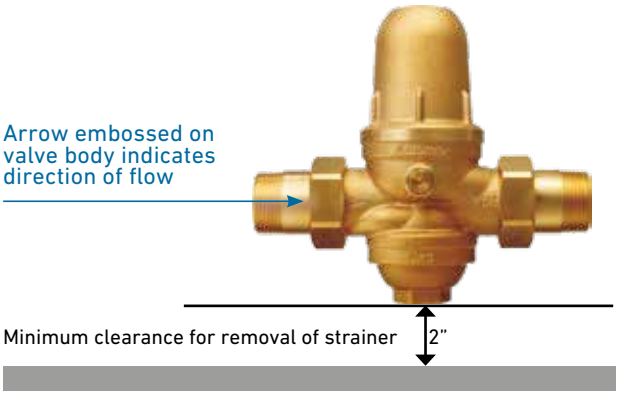

Installations with heating cables

When using heating cables on hot water pipes between pressure reducing valves, install a check valve and safety relief valve as illustrated. This provides protection for plumbing fixtures and piping components from potential rising pressure due to freezing temperatures.

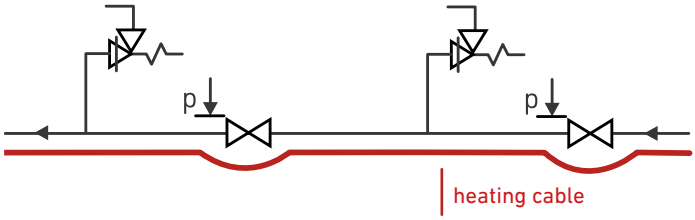

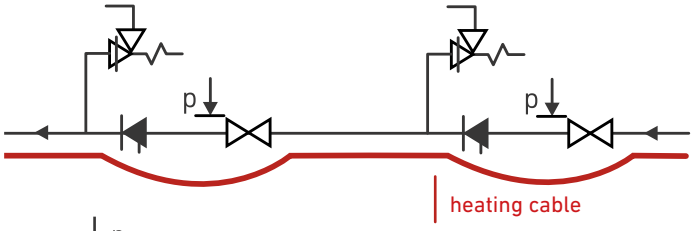

Type 1319/1339

Check valve

Safety relief valve

Install valves in an accessible location for inspection and adjustment.

Flow capacity for Type 1319/1339 pressure reducing valves

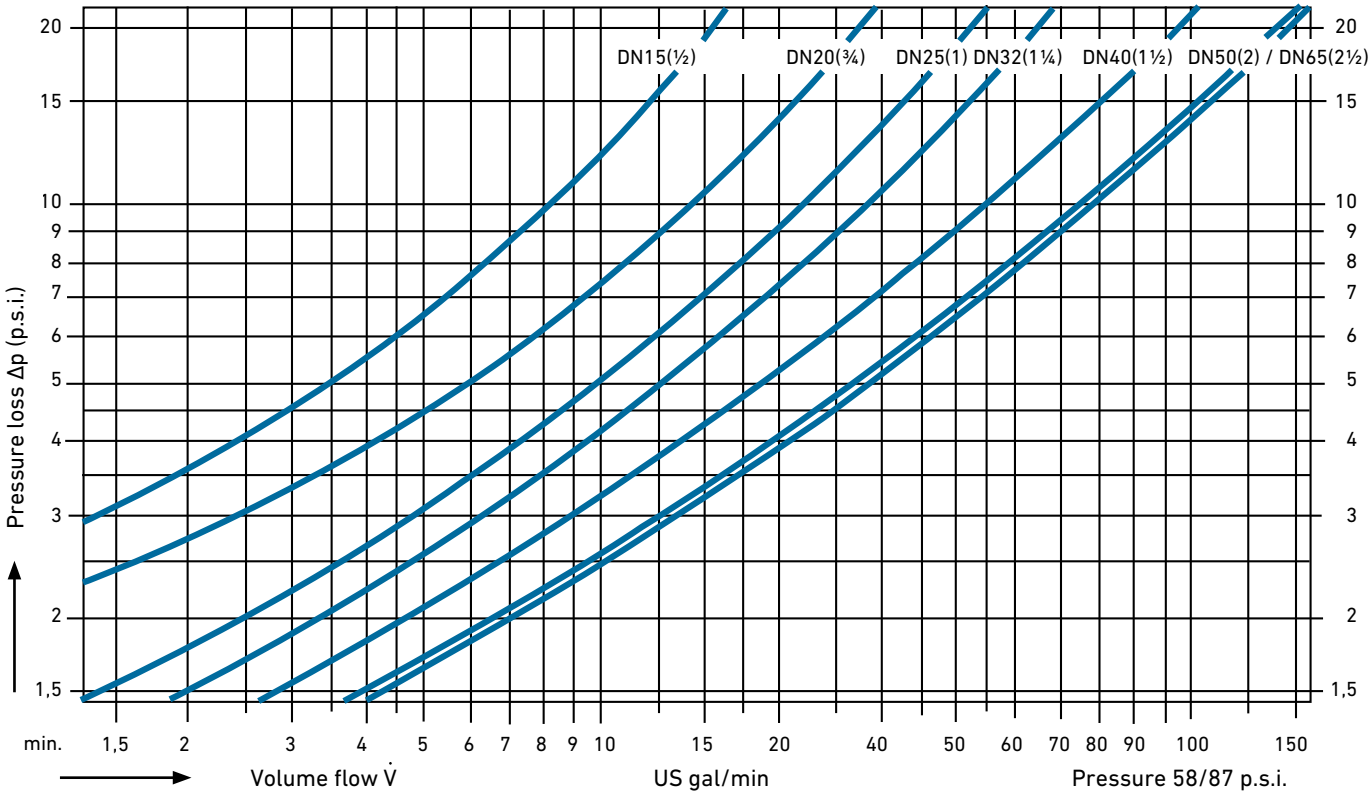

+GF+

PRV Dimensions

Type 1319/1339 pressure reducing valve with unions

Wetted parts are made of low lead brass. Floating seat made of 416 stainless steel.

- Male NPT union connections standard
- Gauge connections for downstream pressure on both sides come plugged from the factory
- Maximum inlet pressure 357 psi/ temperature maximum 158°F

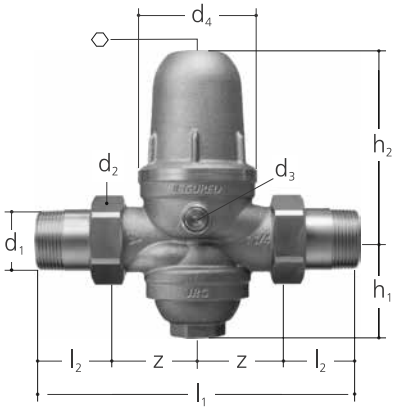

Type 1319: 28–85 PSI
Standard factory set at 56 PSI

Nominal size (inch)	Part Number	d1 (inch)	d2 (inch)	d3 (inch)	d4 (inch)	l1 (inch)	l2 (inch)	z (inch)	h1 (inch)	h2 (inch)	net weight (lb)
½"	**350 736 368**	½	G ¾	Rp ⅛	2⅛	5⅝	1¼	1 37/64	1 5/16	3 9/32	2.3
¾"	**350 736 468**	¾	G 1	Rp ⅛	2 23/64	6	1 5/16	1 43/64	1 21/32	3 23/64	3.0
1"	**350 736 568**	1	G 1¼	Rp ¼	2 53/64	7 1/16	1 9/16	1 31/32	2 1/32	4 21/64	5.1
1¼"	**350 736 668**	1¼	G 1½	Rp ¼	3 5/32	8⅜	1 13/16	2 23/64	2 33/64	4¾	7.4
1½"	**350 736 768**	1½	G 1¾	Rp ¼	3 49/64	9¾	2	2 55/64	3 5/32	6 3/16	12.3
2"	**350 736 868**	2	G 2⅜	Rp ¼	4 9/64	11 5/16	2¼	3 7/16	3 55/64	6 49/64	18.5
2½"	**350 736 968**	2½	G 3	Rp ¼	4 9/64	12 3/16	2 9/16	3 35/64	3 55/64	6 49/64	21.0

Type 1339: 80–140 PSI
Standard factory set at 80 PSI

Nominal size (inch)	Part Number	d1 (inch)	d2 (inch)	d3 (inch)	d4 (inch)	l1 (inch)	l2 (inch)	z (inch)	h1 (inch)	h2 (inch)	net weight (lb)
½"	**350 737 068**	½	G ¾	Rp ⅛	2⅛	5⅝	1¼	1 37/64	1 5/16	3 9/32	2.3
¾"	**350 737 168**	¾	G 1	Rp ⅛	2 23/64	6	1 5/16	1 43/64	1 21/32	3 23/64	3.0
1"	**350 737 268**	1	G 1¼	Rp ¼	2 53/64	7 1/16	1 9/16	1 31/32	2 1/32	4 21/64	5.1
1¼"	**350 737 368**	1¼	G 1½	Rp ¼	3 5/32	8⅜	1 13/16	2 23/64	2 33/64	4¾	7.4
1½"	**350 737 468**	1½	G 1¾	Rp ¼	3 49/64	9¾	2	2 55/64	3 5/32	6 3/16	12.3
2"	**350 737 568**	2	G 2⅜	Rp ¼	4 9/64	11 5/16	2¼	3 7/16	3 55/64	6 49/64	18.5
2½"	**350 737 668**	2½	G 3	Rp ¼	4 9/64	12 3/16	2 9/16	3 35/64	3 55/64	6 49/64	21.0

Accessories

Strainer Cup O-Ring EPDM

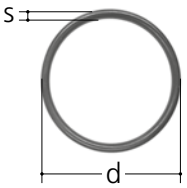

Nominal size (inch)	Part Number	d (inch)	s (inch)
½	**350 981 123**	1.11	0.10
¾	**350 981 127**	1.44	0.10
1	**350 981 222**	1.74	0.10
1¼	**350 981 228**	2.32	0.10
1½	**350 981 616**	2.72	0.10
2, 2½	**350 981 622**	3.47	0.10

Mesh (US 18, 1000 µm) stainless steel

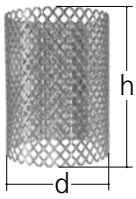

Nominal size (inch)	Part number	d (inch)	h (inch)
½	**350 720 301**	0.61	0.82
¾	**350 720 401**	0.82	1.10
1	**350 720 501**	1.02	1.39
1¼	**350 720 601**	1.31	1.77
1½	**350 720 701**	1.57	2.75
2, 2½	**350 720 801**	1.96	2.75

+ Examples: Master PRV stations

Example 1

Master PRV: Simplex install with no redundancy

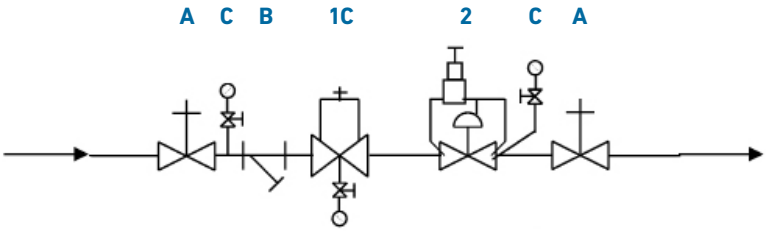

Legend

1 Pressure reducing valve (PRV), GF Type 1319 (Part #350 736 968) 300 Lb Scr'd, low lead brass body, SS trim, 28–85@30 psi

2 (Optional) Excess pressure safety valve, bronze body and trim, 0–75@45 psi

A Isolation ball valve, bronze body, full ported

B 300 Lb Bronze Y strainer

C Pressure gauge, 4" SS case, glycerin fill, 0-100 psi

Manifold capacity

160 gpm Rig inlet 70 psi, PRV outlet 40 psi, excess pressure safety valve set point 55 psi

Valve size

2.5" PRV, strainer, isolation valves

Example 2

Master PRV: Install with parallel redundant legs

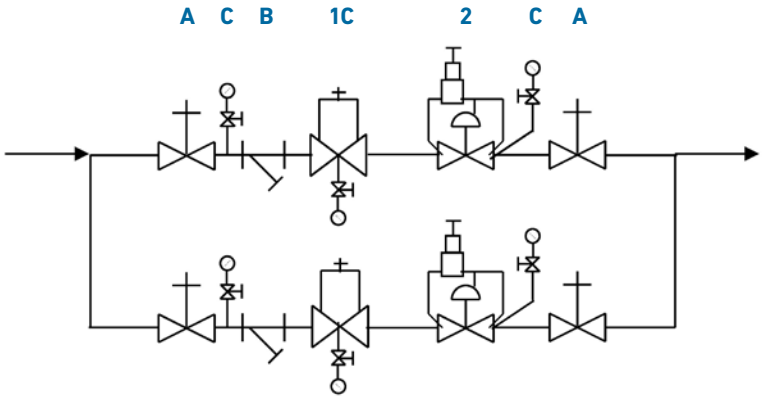

Legend

1 Pressure reducing valve (PRV), GF Type 1319 (Part #350 736 968) 300 Lb Scr'd, low lead brass body, SS trim, 28–85@60 psi

2 (Optional) Excess pressure safety valve, bronze body and trim, 20–200@75 psi

A Isolation ball valve, bronze body, full ported

B 300 Lb Bronze Y strainer

C Pressure gauge, 4" SS case, glycerin fill, 0-200 psi

Manifold capacity

160 gpm; inlet 90 psi, PRV outlet 60 psi, excess pressure safety valve set point 75 psi

Valve size

2.5" PRVs, strainers, isolation valves

Note: Provide optional Item 2 "Excess pressure safety valve" in critical applications where excessive downstream pressure could damage piping, fittings, valves, fixtures or equipment.

+ Examples: Master PRV stations with excess pressure safety valves

Series or Multi-stage reduction is recommended so that the outlet pressure does not fall below 45% of the inlet pressure. Series installation limits pressure drop avoiding cavitation issues which include damage, noise, vibration and erosion of the valve seat.

Example 3

Master PRV: Two stage reduction , with parallel redundant leg

Two stage pressure reduction is required due to pressure drop.

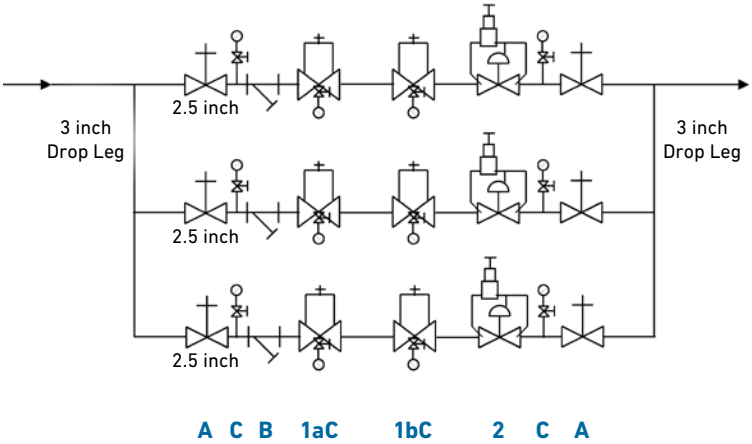

Legend

1a Pressure reducing valve (PRV), GF Type 1319 (Part #350 736 968) 300 Lb Scr'd, low lead brass body, SS trim, 28-85@60 psi

1b Pressure reducing valve (PRV), GF Type 1319 (Part #350 736 968) 300 Lb Scr'd, BS, 28-85 psi EPDM

2 (Optional) Excess pressure safety valve

A Isolation ball valve, bronze body, full ported

B 300 Lb Bronze Y strainer

C Pressure gauge, 4" SS glycerin filled case (typical)

Manifold capacity

260 gpm; inlet 142 psi, PRV outlet 35 psi, excess pressure safety valve set point 55 psi

Valve size

2.5" PRVs, strainers, isolation valves

Example 4

Master PRV: Two stage reduction and Low Flow Bypass

Two stage pressure reduction is required due to pressure drop.

Low flow bypass to remove potential for chatter.

Set point about 5-7 psi higher than larger valve.

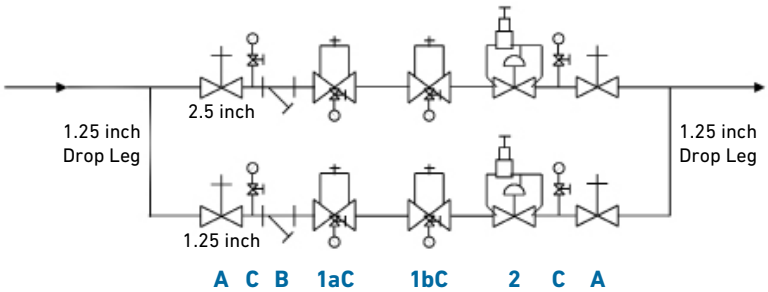

Legend

1a Pressure reducing valve (PRV), GF Type 1319 (Part #350 736 668) 300 Lb Scr'd, BS, 80-140 psi, EPDM

1b Pressure reducing valve (PRV), GF Type 1319 (Part #350 736 968) 300 Lb Scr'd, BS, 28-85 psi EPDM

2 (Optional) Excess pressure safety valve

3a Pressure reducing valve (PRV), GF Type 1319 (Part #350 737 368) 300 Lb Scr'd, BS, 80-140 psi, EPDM

3b Pressure reducing valve (PRV), GF Type 1319 (Part #350 736 668) 300 Lb Scr'd, BS, 28-85 psi EPDM

A Isolation ball valve, bronze body, full ported

B 300 Lb Bronze Y strainer

C Pressure gauge, 4" SS glycerin filled case (typical)

Manifold capacity

160 gpm; inlet 142 psi, PRV outlet 35 psi, excess pressure safety valve set point 55 psi

Valve size

2.5" and 1.25" PRVs, strainers, isolation valves

Note: Provide optional Item 2 "Excess pressure safety valve" in critical applications where excessive downstream pressure could damage piping, fittings, valves, fixtures or equipment.

GF Piping Systems

Our sales companies and representatives ensure local customer support in over 100 countries.

Argentina / Southern South America
Georg Fischer Central Plastics
Sudamérica S.R.L.
Buenos Aires, Argentina
Phone +54 11 4512 02 90
gfcentral.ps.ar@georgfischer.com
www.gfps.com/ar

Australia
George Fischer Pty Ltd
Riverwood NSW 2210 Australia
Phone +61 (0) 2 9502 8000
australia.ps@georgfischer.com
www.gfps.com/au

Austria
Georg Fischer
Rohrleitungssysteme GmbH
3130 Herzogenburg
Phone +43 (0) 2782 856 43-0
austria.ps@georgfischer.com
www.gfps.com/at

Belgium / Luxembourg
Georg Fischer NV/SA
1070 Bruxelles/Brüssel
Phone +32 (0) 2 556 40 20
be.ps@georgfischer.com
www.gfps.com/be

Brazil
Georg Fischer Sist. de Tub. Ltda.
04571-020 São Paulo/SP
Phone +55 (0)11 5525 1311
br.ps@georgfischer.com
www.gfps.com/br

Canada
Georg Fischer Piping Systems Ltd
Mississauga, ON L5T 2B2
Phone +1 (905) 670 8005
Fax +1 (905) 670 8513
ca.ps@georgfischer.com
www.gfps.com/ca

China
Georg Fischer Piping Systems Ltd
Shanghai 201319
Phone +86 21 3899 3899
china.ps@georgfischer.com
www.gfps.com/cn

Denmark / Iceland
Georg Fischer A/S
2630 Taastrup
Phone +45 (0) 70 22 19 75
info.dk.ps@georgfischer.com
www.gfps.com/dk

Finland
Georg Fischer AB
01510 VANTAA
Phone +358 (0) 9 586 58 25
Fax +358 (0) 9 586 58 29
info.fi.ps@georgfischer.com
www.gfps.com/fi

France
Georg Fischer SAS
95932 Roissy Charles de Gaulle
Cedex
Phone +33 (0) 1 41 84 68 84
fr.ps@georgfischer.com
www.gfps.com/fr

Germany
Georg Fischer GmbH
73095 Albershausen
Phone +49 (0) 7161 302-0
info.de.ps@georgfischer.com
www.gfps.com/de

India
Georg Fischer Piping Systems Ltd
400 083 Mumbai
Phone +91 224007 2001
branchoffice@georgfischer.com
www.gfps.com/in

Indonesia
George Fischer Pte Ltd –
Representative Office
Phone +62 21 2900 8564
Fax +62 21 2900 8566
sgp.ps@georgfischer.com
www.gfps.com/sg

Italy
Georg Fischer S.p.A.
20063 Cernusco S/N (MI)
Phone +39 02 921 861
it.ps@georgfischer.com
www.gfps.com/it

Japan
Georg Fischer Ltd
556-0011 Osaka,
Phone +81 (0) 6 6635 2691
jp.ps@georgfischer.com
www.gfps.com/jp

Korea
GF Piping Systems
Georg Fischer Korea Co., Ltd.
Unit 2501, U-Tower
120 HeungdeokJungang-ro
(Yeongdeok-dong)
Giheung-gu, Yongin-si, Gyeonggi-do,
Korea
Phone: +82 31 8017 1450
Fax : +82 31 217 1454
kor.ps@georgfischer.com
www.gfps.com/kr

Malaysia
George Fischer (M) Sdn. Bhd.
No. 2, 4 & 6, Jalan Permata 3/KS 09
Taman Perindustrian Air Hitam
41200 Klang, Selangor Darul Ehsan
Phone +60 (0) 3 3122 5585
Fax +603 3122 5575
my.ps@georgfischer.com
www.gfps.com/my

Mexico / Northern Latin America
Georg Fischer S.A. de C.V.
Apodaca, Nuevo Leon
CP66636 Mexico
Phone +52 (81) 1340 8586
Fax +52 (81) 1522 8906
mx.ps@georgfischer.com
www.gfps.com/mx

Middle East
Georg Fischer
Piping Systems (Switzerland) Ltd
Dubai, United Arab Emirates
Phone +971 4 289 49 60
gcc.ps@georgfischer.com
www.gfps.com/int

Netherlands
Georg Fischer N.V.
8161 PA Epe
Phone +31 (0) 578 678 222
nl.ps@georgfischer.com
www.gfps.com/nl

Norway
Georg Fischer AS
1351 Rud
Phone +47 67 18 29 00
no.ps@georgfischer.com
www.gfps.com/no

Philippines
George Fischer Pte Ltd
Representative Office
Phone +632 571 2365
Fax +632 571 2368
sgp.ps@georgfischer.com
www.gfps.com/sg

Poland
Georg Fischer Sp. z o.o.
05-090 Sekocin Nowy
Phone +48 (0) 22 31 31 0 50
poland.ps@georgfischer.com
www.gfps.com/pl

Romania
Georg Fischer
Piping Systems (Switzerland) Ltd
020257 Bucharest - Sector 2
Phone +40 (0) 21 230 53 80
ro.ps@georgfischer.com
www.gfps.com/int

Russia
Georg Fischer
Piping Systems (Switzerland) Ltd
Moscow 125040
Phone +7 495 748 11 44
ru.ps@georgfischer.com
www.gfps.com/ru

Singapore
George Fischer Pte Ltd
11 Tampines Street 92, #04-01/07
528 872 Singapore
Phone +65 6747 0611
Fax +65 6747 0577
sgp.ps@georgfischer.com
www.gfps.com/sg

Spain / Portugal
Georg Fischer S.A.
28046 Madrid
Phone +34 (0) 91 781 98 90
es.ps@georgfischer.com
www.gfps.com/es

Sweden
Georg Fischer AB
117 43 Stockholm
Phone +46 (0) 8 506 775 00
info.se.ps@georgfischer.com
www.gfps.com/se

Switzerland
Georg Fischer
Rohrleitungssysteme (Schweiz) AG
8201 Schaffhausen
Phone +41 (0) 52 631 30 26
ch.ps@georgfischer.com
www.gfps.com/ch

Taiwan
Georg Fischer Co., Ltd
San Chung Dist., New Taipei City
Phone +886 2 8512 2822
Fax +886 2 8512 2823
www.gfps.com/tw

United Kingdom / Ireland
George Fischer Sales Limited
Coventry, CV2 2ST
Phone +44 (0) 2476 535 535
uk.ps@georgfischer.com
www.gfps.com/uk

USA / Caribbean
Georg Fischer LLC
9271 Jeronimo Road
92618 Irvine, CA
Phone +1 714 731 88 00
Fax +1 714 731 62 01
us.ps@georgfischer.com
www.gfps.com/us

International
Georg Fischer
Piping Systems (Switzerland) Ltd
8201 Schaffhausen/Switzerland
Phone +41 (0) 52 631 30 03
Fax +41 (0) 52 631 28 93
info.export@georgfischer.com
www.gfps.com/int

The technical data are not binding. They neither constitute expressly warranted characteristics nor guaranteed properties nor a guaranteed durability.
They are subject to modification. Our General Terms of Sale apply.

Contact us

Tel. (714) 731-8800, Toll Free (800) 854-4090
Fax (714) 731-6201
us.ps@georgfischer.com
www.gfpiping.com

Item #1372 (02/25/19)
© 2018 Georg Fischer LLC
Printed in USA