Quick navigation

- Technical data
- Product description
- Installation notes
- Dimensions and Ordering
- Spare parts

Technical Datasheet

Type 369 Check Valve



Check Valve type 369 is designed to prevent backflow in piping systems for water treatment and chemical process industry applications. It is suitable for operation with liquids and gases, including solid-containing, viscous and crystallizing media, under defined pressure and temperature conditions.

- Self-closing check valve design for reliable backflow prevention
- Suitable for horizontal and vertical installation
- Optional return spring for stable operation in pulsating flow conditions
- Compact, wafer-style design for installation between ISO/DIN and ANSI/BS flanges
- Integrated flange gasket for simplified installation and secure sealing
- Robust, corrosion-resistant construction with minimal maintenance requirements

04/2026-A 1271473

The information and technical data (altogether "Data") herein are not binding, unless explicitly confirmed in writing. The Data neither constitutes any expressed, implied or warranted characteristics, nor guaranteed properties or a guaranteed durability. All Data is subject to modification. The General Terms and Conditions of Sale of Georg Fischer Piping Systems apply.
© Georg Fischer Piping Systems Ltd, 8201 Schaffhausen/Switzerland

Tel. +41 52 631 11 11 • www.gfps.com • E-Mail: info.ps@georgfischer.com

Technical data

Specifications	
Dimensions	d40/DN32 – d315/DN300 / 1¼" – 12" to DN600 / 24" available upon request
	PVC-U, PP-H, PVDF
Gasket materials	EPDM, FKM
Pressure level	PN6/PN10
Flow media	Media that are free of foreign particles, media containing solids, as well as crystallizing, viscous, thick and gaseous media. The chemical resistance depends on the selected material (see online tool ChemRes PLUS).
Connections	Flange joints
Product standard	EN ISO 16137
Test standard	ISO 9393-2, EN 12266-1
Approvals	KTW UBA, DVGW W 270, WRAS, NSF, FDA

Opening pressure

			Opening pressure (mbar)			
DN (mm)	inch (inch)	d (mm)	Vertical without spring	Vertical with spring	Horizontal without spring	Horizontal with spring
32	1¼	40	2	4	0.2	2
40	1½	50	2	4	0.2	2
50	2	63	3	5	0.2	2
65	2½	75	3	5	0.2	2
80	3	90	3	5	0.2	2
100	4	110	3	5	0.2	2
125	5	140	3	5	0.2	2
150	6	160	3	5	0.2	2
200	8	225	4	6	0.2	2
250	10	280	4	6	0.2	2
300	12	315	4	6	0.2	2

Leak-tightness

			Tightness of water column (m)	
DN (mm)	inch (inch)	d (mm)	PVC-U, PVDF	PP
32	1¼	40	2	3
40	1½	50	2	3
50	2	63	2	3
65	2½	75	2	3
80	3	90	2	3
100	4	110	2	3
125	5	140	2	3
150	6	160	2	3
200	8	225	2	3
250	10	280	2	3
300	12	315	2	3

Kv 100 values

PVC-U

DN (mm)	Inch (inch)	d (mm)	Kv 100 (l/min) (Δp = 1 bar)	Cv 100 (US gal./min) (Δp = 1 psi)	Kv 100 (m^3/h) (Δp = 1 bar)
32	1¼	40	270	18.9	16.2
40	1½	50	370	25.9	22.2
50	2	63	900	63	54
65	2½	75	1'140	79.8	68
80	3	90	1'870	130.9	112
100	4	110	2'870	200.9	172
125	5	140	5'700	399.0	342
150	6	160	6'900	483.0	414
200	8	225	18'800	1'316.0	1'128
250	10	280	25'000	1'750.0	1'500
300	12	315	27'600	1'932.0	1'656

PP with outlet flange adapter PP/PE, SDR11, PN10

DN (mm)	Inch (inch)	d (mm)	Kv 100 (l/min) (Δp = 1 bar)	Cv 100 (US gal./min) (Δp = 1 psi)	Kv 100 (m^3/h) (Δp = 1 bar)
32	1¼	40	280	19.6	16.8
40	1½	50	340	23.8	20.4
50	2	63	610	42.7	36.6
65	2½	75	1'230	86.1	74
80	3	90	2'610	182.7	157
100	4	110	3'930	275.1	236
125	5	140	7'120	498.4	427
150	6	160	9'180	642.6	551
200	8	225	17'600	1'232.0	1'056
250	10	280	24'400	1'708.0	1'464
300	12	315	31'900	2'233.0	1'914

PVDF, pipe PN16 SDR26, PN10 SDR33 from d90

DN (mm)	inch (inch)	d (mm)	Kv 100 (l/min) (Δp = 1 bar)	Cv 100 (US gal./min) (Δp = 1 psi)	Kv 100 (m^3/h) (Δp = 1 bar)
32	1¼	40	280	19.6	16.8
40	1½	50	340	23.8	20.4
50	2	63	610	42.7	36.6
65	2½	75	1'230	86.1	74
80	3	90	2'610	182.7	157
100	4	110	3'930	275.1	236
125	5	140	7'120	498.4	427
150	6	160	9'180	642.6	551
200	8	225	17'600	1'232.0	1'056
250	10	280	24'400	1'708.0	1'464
300	12	315	31'900	2'233.0	1'914

Pressure-temperature diagrams

The following pressure-temperature diagrams are based on a service life of 25 years and water or similar media.
T Temperature (°C, °F)
P Permissible pressure (bar, psi)

PVC-U

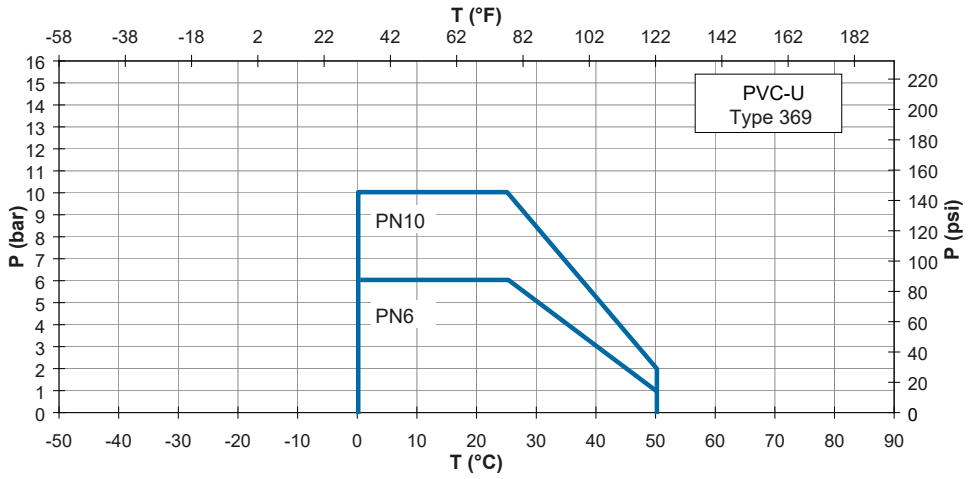

PP-H

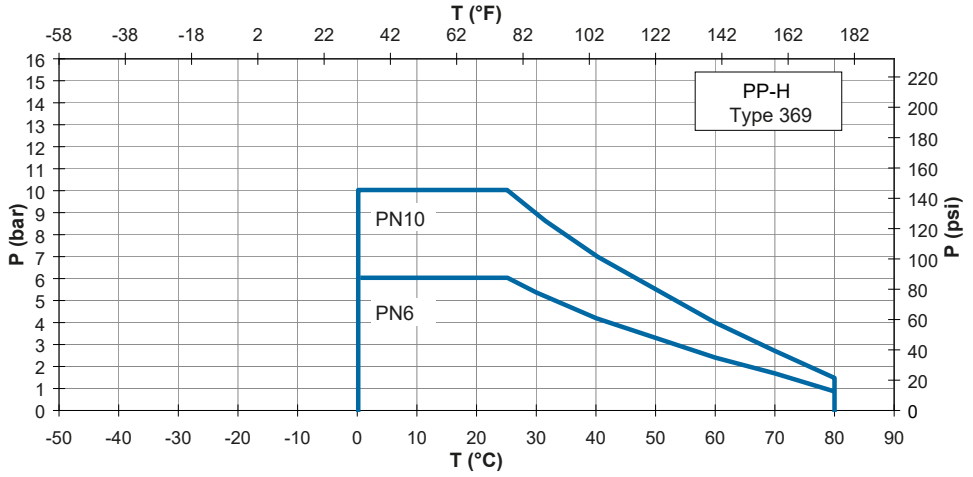

PVDF

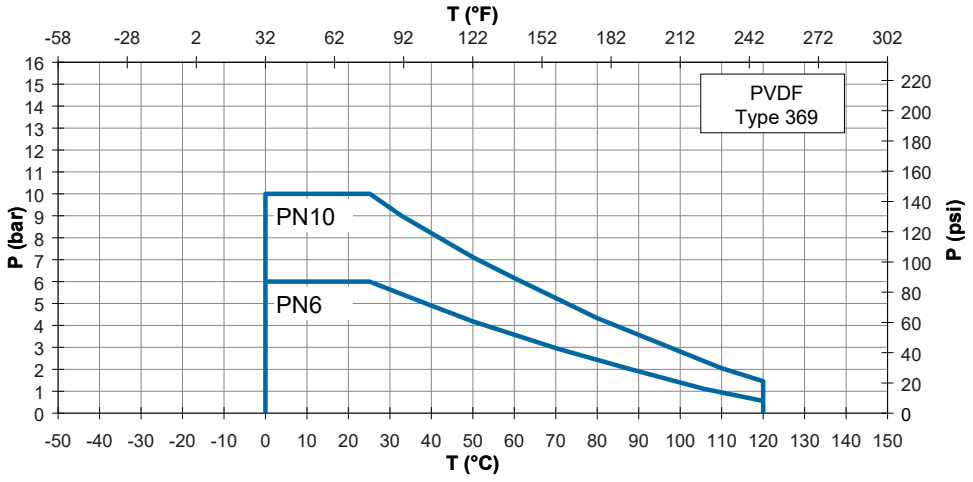

Pressure losses

PVC-U, pipe PN10

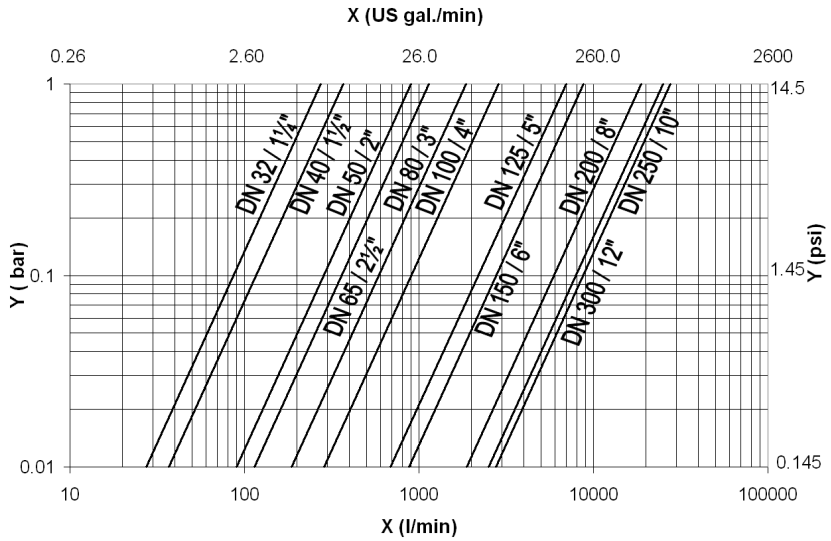

Medium: water 20 °C
X Flow rate (l/min, US gal/min)
Y Pressure loss Δp (bar, psi)

PP with outlet flange adapter PP/PE, SDR11 (PN10)

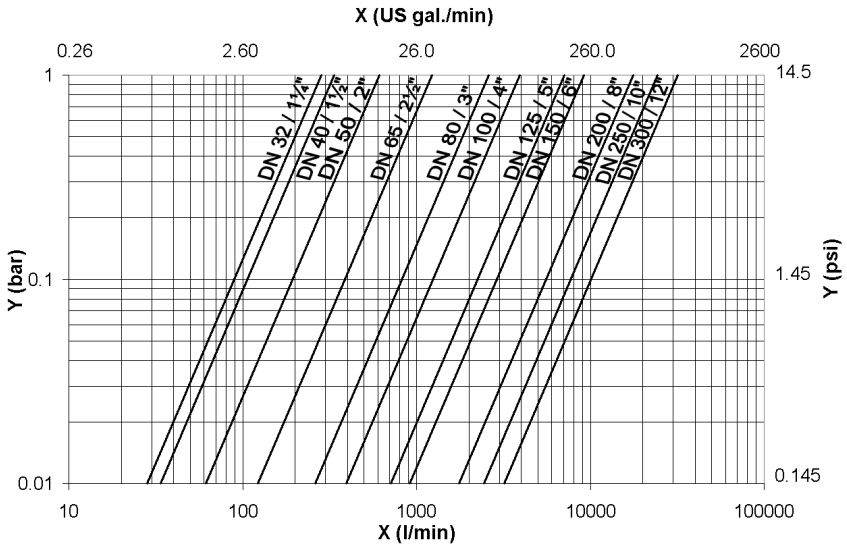

Medium: water 20 °C
X Flow rate (l/min, US gal/min)
Y Pressure loss Δp (bar, psi)

PVDF, pipe PN16, SDR26

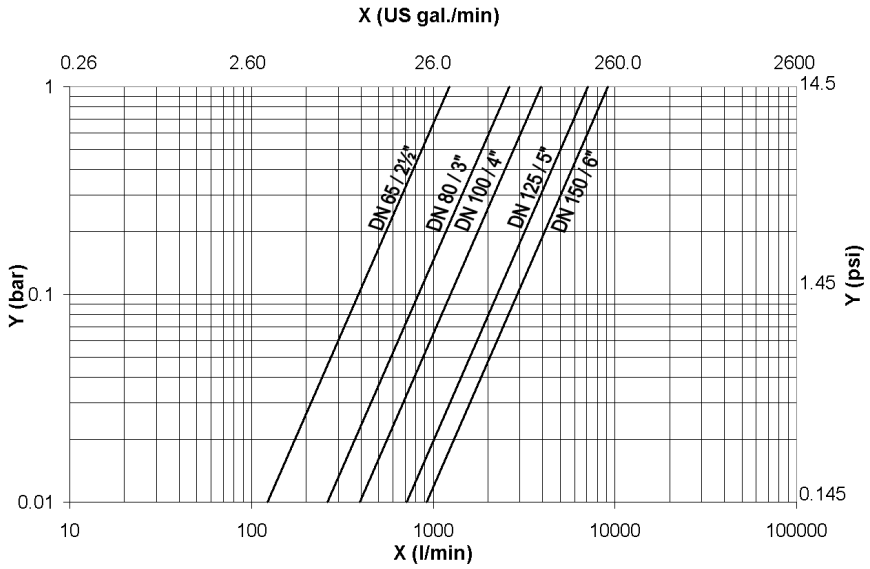

Medium: water 20 °C
X Flow rate (l/min, US gal/min)
Y Pressure loss Δp (bar, psi)

Product description

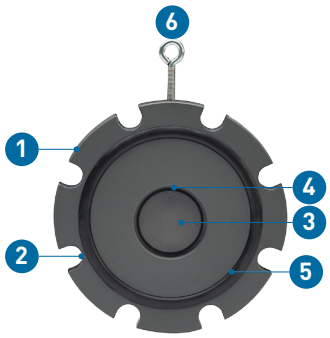

1 Housing
2 Cut-out for centering
3 Disc
4 Fastening for disc
5 Flange seal
6 Supporting eylets

Function

The Type 369 wafer check valve is used to prevent backflow in piping systems. It is designed for applications involving liquids, particularly in water and wastewater systems, where a defined flow direction must be ensured.
The valve consists of a housing with an integrated cut-out for centering between flanges. Inside, a movable disc is mounted via a disc fastening. A flange seal ensures a tight connection to the piping system. Supporting eyelets allow proper positioning and installation.
During operation, the disc opens under forward flow due to the applied pressure. If the flow decreases or a counterpressure occurs, for example caused by an increasing water column on the downstream side, the disc moves into the closed position. This automatically interrupts the flow and reliably prevents backflow.

Forward flow	Counterpressure

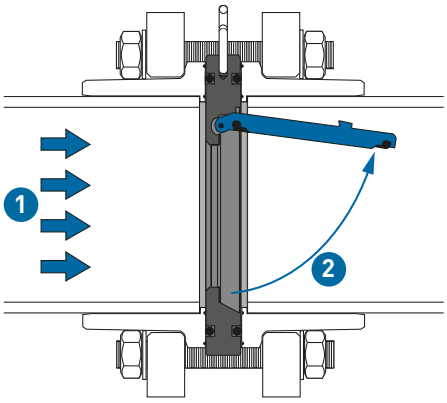

1 Forward flow
2 Disc opened

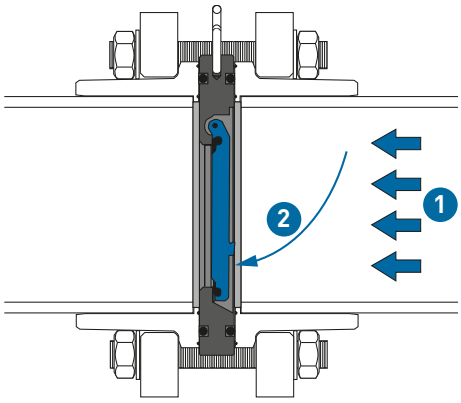

1 Backflow/Counterpressure
2 Disc closed

Installation notes

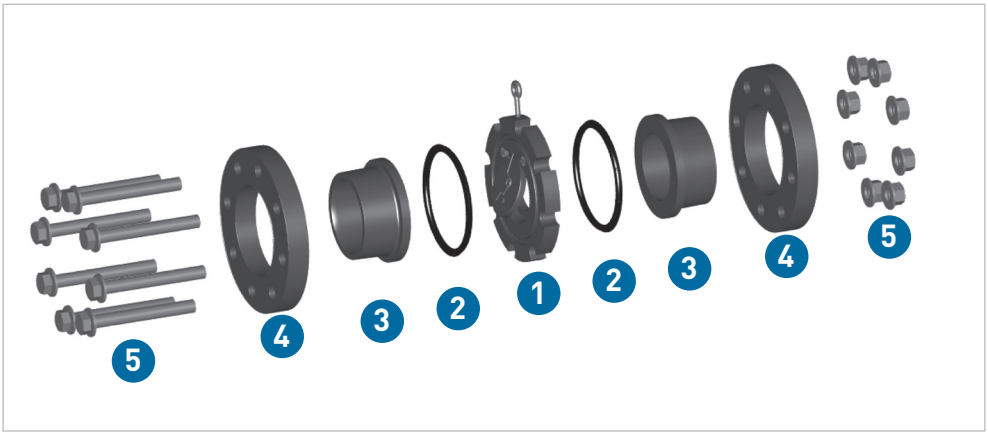

1 Type 369 Check Valve
2 Flange seal
3 Valve end / flange adapter
4 Flanges
5 Screws, washers and nuts

- Install between ISO/DIN (all dimensions) and ANSI/BS valve ends (all except DN32 and DN125).
- Installation with ANSI/BS valve ends: for check valves in the dimensions DN40 to DN80, ANSI/BS valve ends of the next larger dimension must be used (example DN40 check valve between DN50 ANSI/BS valve ends).
- Centering through housing diameter (ISO/DIN through D3, ANSI/BS through D).
- Sealing with special flange gasket (except DN32, o-ring).
- Before and after the check valve trap, a damping zone of at least 5 times the nominal diameter (DN) should be planned for (we recommend 10 times the nominal diameter).
- Do not install directly on pump flange or subsequent bend.
- PVC-U: The using of PVC-U pipe PN16 is only possible up to d63.
- Wafer Check Valves without spring are not recommended for pulsating flow conditions (noise generation).
- Pay attention on installation between ANSI/BS flange adaptors. The WCV DN32 does not fit together with ANSI/BS flange adaptors. For wafer check valve in the dimensions DN40 to DN80 the next larger size of ANSI/BS flange adapter has to be used (example: a DN40 valve has to be mounted between DN 50 ANSI/BS flange adaptors).
- PP and PE: To ensure the proper function of the valve in PP and PE piping systems, a suitable outlet adaptor is required on the outlet side. Please contact your local GF sales representative for further information.
- PVDF: GF recommends for PVDF piping systems the use of a fusion neck one size larger than the pipeline or the use of a wafer check valve one size smaller than the pipe. (example: two d110 fusion necks should be used for the wafer check valve d90).

Selection of lubricant

Using incorrect lubricants can corrode the material of the check valve or the gaskets.

- Mineral oil-based lubricants and Vaseline (petrolatum) are not appropriate.

All gaskets should be lubricated with silicon- or polyol-based grease.

Maintenance notes

In normal operation, check valve traps do not need maintenance. It is sufficient to check periodically that there is no leakage. If media exits at the flange connections, the flange connections must be tightened or replaced in accordance with the tables in "Guidelines for fastening screws".

⚠ Installation and maintenance must be performed according to the corresponding installation instructions. The installation manual is included with the product and can also be found at www.gfps.com/is-manuals-valves

Flange dimensions

Dopt: Optimum inner diameter of connecting element.

- Opening angle of the disc approx. 60° (maximum flow).
- Minimized mechanical stress
- Ideal Kv value

Dmin: Minimum inner diameter at which the disc opens properly.

Since the disc is in contact with the inside of the pipe of the connecting element when it is open, the inside diameter of the connecting element can influence the Kv value.

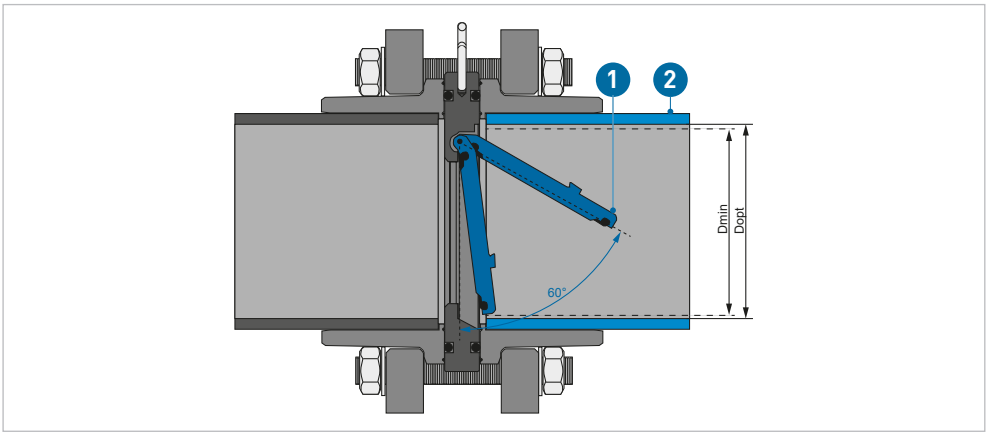

1 Disc
2 Connecting element

Flange dimension			ISO/DIN		ANSI/BS	
D (mm)	d (mm)	D (inch)	Dmin (mm)	Dopt (mm)	Dmin (mm)	Dopt (mm)
DN32	40	1¼	34	37	-	-
DN40	50	1½	39	43	39	43
DN50	63	2	53.5	54	53.5	54
DN65	75	2½	69	70	69	70
DN80	90	3	81	82	81	82
DN100	110	4	104	106	104	106
DN125	140	5	125.5	131	-	-
DN150	160	6	142	144	142	144
DN200	225	8	201	207	201	207
DN250	280	10	250	260	250	260
DN300	315	12	300	309	300	309

Centering and Opening Angle of The Valve

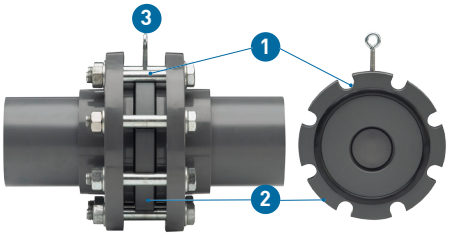

1 Cut-out
2 External diameter
3 Supporting eylet

Make sure that the disk attach on the inner pipe wall. It is not allowed that the disk attach on the limit stop of the valve.

Reference values for tightening torque of screws

Metric flange adapter

d (mm)	DN (mm)	Inch (inch)	Total number of screws	Max. screw tightening torque (Nm)	(lb-ft)
40	32	1¼	4 x M16 x 85	15	133
50	40	1½	4 x M16 x 85	15	133
63	50	2	4 x M16 x 95	20	177
75	65	2½	4 x M16 x 100	25	221
90	80	3	8 x M16 x 110	25	221
110	100	4	8 x M16 x 130	30	266
140	125	5	8 x M16 x 130	35	310
160	150	6	8 x M20 x 180	40	354
225	200	8	8 x M20 x 180	50	442
280	250	10	12 x M20 x 180	55	487
315	300	12	12 x M20 x 180	60	531

ANSI/BS flange adapters

d (mm)	DN (mm)	Inch (inch)	Total number of screws	Max. closing torque (Nm)	(lb-ft)
50	40	2	4 x UNC5/8" x 3½"	20	177
63	50	2½	4 x UNC5/8" x 4"	25	221
75	65	3	4 x UNC5/8" x 4"	25	221
90	80	4	8 x UNC5/8" x 4½"	30	266
110	100	4	8 x UNC5/8" x 4½"	30	266
160	150	6	8 x UNC3/4" x 5"	40	354
225	200	8	8 x UNC3/4" x 6"	50	442
280	250	10	12 x UNC7/8" x 6½"	55	487
315	300	12	12 x UNC7/8" x 7"	60	531

Dimensions and Ordering

Wafer Check Valve type 369

d (mm)	DN (mm)	inch (inch)	D (mm)	D1 (mm)	D2 (mm)	D3 (mm)	L (mm)	L1 (mm)	H (mm)
40	32	1¼	85	59	18	-	15	22	25
50	40	1½	105	77	22	95	16	27	27
63	50	2	124	92	32	109	18	40	29
75	65	2½	137	111	40	129	20	55	31
90	80	3	175	131	54	144	20	67	32
110	100	4	175	153	70	164	23	77	31
140	125	5	195	185	92	-	23	94	35
160	150	6	222	198	105	220	26	100	41
225	200	8	279	259	154	275	34	152	38
280	250	10	340	311	192	330	40	180	41
315	300	12	410	347	227	380	45	215	41

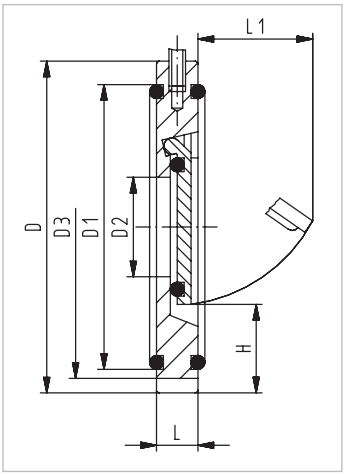

PVC-U

Wafer check valve type 369 PVC-U without spring

DN (mm)	d (mm)	Size (inch)	PN (bar)	EPDM Code	FKM Code
32	40	1 ¼	10	161 369 002	161 369 022
40	50	1 ½	10	161 369 003	161 369 023
50	63	2	10	161 369 004	161 369 024
65	75	2 ½	10	161 369 005	161 369 025
80	90	3	10	161 369 006	161 369 026
100	110	4	10	161 369 007	161 369 027
125	140	5	10	161 369 009	161 369 029
150	160	6	6	161 369 010	161 369 030
200	225	8	6	161 369 011	161 369 031
250	280	10	6	161 369 012	161 369 032
300	315	12	6	161 369 013	161 369 033



Wafer check valve type 369 PVC-U with V4A spring (stainless steel 316)

DN (mm)	d (mm)	Size (inch)	PN (bar)	EPDM Code	FKM Code
32	40	1 ¼	10	161 369 042	161 369 062
40	50	1 ½	10	161 369 043	161 369 063
50	63	2	10	161 369 044	161 369 064
65	75	2 ½	10	161 369 045	161 369 065
80	90	3	10	161 369 046	161 369 066
100	110	4	10	161 369 047	161 369 067
125	140	5	10	161 369 049	161 369 069
150	160	6	6	161 369 050	161 369 070
200	225	8	6	161 369 051	161 369 071
250	280	10	6	161 369 052	161 369 072
300	315	12	6	161 369 053	161 369 073



Wafer check valve type 369 PVC-U with Hastelloy C spring

DN (mm)	d (mm)	Size (inch)	PN (bar)	EPDM Code	FKM Code
32	40	1 ¼	10	161 369 082	161 369 102
40	50	1 ½	10	161 369 083	161 369 103
50	63	2	10	161 369 084	161 369 104
65	75	2 ½	10	161 369 085	161 369 105
80	90	3	10	161 369 086	161 369 106
100	110	4	10	161 369 087	161 369 107
125	140	5	10	161 369 089	161 369 109
150	160	6	6	161 369 090	161 369 110
200	225	8	6	161 369 091	161 369 111
250	280	10	6	161 369 092	161 369 112
300	315	12	6	161 369 093	161 369 113



PP-H PROGEF Standard

Wafer check valve type 369 PVC-U without spring

DN (mm)	d (mm)	Size (inch)	PN (bar)	EPDM Code	FKM Code
32	40	1 ¼	10	167 369 002	167 369 022
40	50	1 ½	10	167 369 003	167 369 023
50	63	2	10	167 369 004	167 369 024
65	75	2 ½	10	167 369 005	167 369 025
80	90	3	10	167 369 006	167 369 026
100	110	4	10	167 369 007	167 369 027
125	140	5	10	167 369 009	167 369 029
150	160	6	6	167 369 010	167 369 030
200	225	8	6	167 369 011	167 369 031
250	280	10	6	167 369 012	167 369 032
300	315	12	6	167 369 013	167 369 033



PROGEF Standard Wafer check valve type 369 with V4A spring (stainless steel 316)

DN (mm)	d (mm)	Size (inch)	PN (bar)	EPDM Code	FKM Code
32	40	1 ¼	10	167 369 042	167 369 062
40	50	1 ½	10	167 369 043	167 369 063
50	63	2	10	167 369 044	167 369 064
65	75	2 ½	10	167 369 045	167 369 065
80	90	3	10	167 369 046	167 369 066
100	110	4	10	167 369 047	167 369 067
125	140	5	10	167 369 049	167 369 069
150	160	6	6	167 369 050	167 369 070
200	225	8	6	167 369 051	167 369 071
250	280	10	6	167 369 052	167 369 072
300	315	12	6	167 369 053	167 369 073



PROGEF Standard Wafer check valve type 369 with Hastelloy C spring

DN (mm)	d (mm)	Size (inch)	PN (bar)	EPDM Code	FKM Code
32	40	1 ¼	10	167 369 082	167 369 002
40	50	1 ½	10	167 369 083	167 369 003
50	63	2	10	167 369 084	167 369 004
65	75	2 ½	10	167 369 085	167 369 005
80	90	3	10	167 369 086	167 369 006
100	110	4	10	167 369 087	167 369 007
125	140	5	10	167 369 089	167 369 009
150	160	6	6	167 369 090	167 369 110
200	225	8	6	167 369 091	167 369 111
250	280	10	6	167 369 092	167 369 112
300	315	12	6	167 369 093	167 369 113



PVDF SYGEF Standard

SYGEF Standard Wafer Check valve type 369 without spring

DN (mm)	d (mm)	Size (inch)	PN (bar)	FKM Code
32	40	1 ¼	10	175 369 022
40	50	1 ½	10	175 369 023
50	63	2	10	175 369 024
65	75	2 ½	10	175 369 025
80	90	3	10	175 369 026
100	110	4	10	175 369 027
125	140	5	10	175 369 029
150	160	6	6	175 369 030
200	225	8	6	175 369 031
250	280	10	6	175 369 032
300	315	12	6	175 369 033



SYGEF Standard Wafer check valve type 369 with V4A spring (stainless steel 316)

DN (mm)	d (mm)	Size (inch)	PN (bar)	FKM Code
32	40	1 ¼	10	175 369 062
40	50	1 ½	10	175 369 063
50	63	2	10	175 369 064
65	75	2 ½	10	175 369 065
80	90	3	10	175 369 066
100	110	4	10	175 369 067
125	140	5	10	175 369 069
150	160	6	6	175 369 070
200	225	8	6	175 369 071
250	280	10	6	175 369 072
300	315	12	6	175 369 073



SYGEF Standard Wafer check valve type 369 with Hastelloy C spring

DN (mm)	d (mm)	Size (inch)	PN (bar)	FKM Code
32	40	1 ¼	10	175 369 102
40	50	1 ½	10	175 369 103
50	63	2	10	175 369 104
65	75	2 ½	10	175 369 105
80	90	3	10	175 369 106
100	110	4	10	175 369 107
125	140	5	10	175 369 109
150	160	6	6	175 369 110
200	225	8	6	175 369 111
250	280	10	6	175 369 112
300	315	12	6	175 369 113



Spare parts

Disc set (2)

DN (mm)	d (mm)	Size (inch)	PVC-U EPDM Code	PVC-U FKM Code	PP-H EPDM Code	PP-H FKM Code	PVDF FKM Code
32	40	1 ¼	161 369 122	161 369 142	167 369 122	167 369 142	175 369 142
40	50	1 ½	161 369 123	161 369 143	167 369 123	167 369 143	175 369 143
50	63	2	161 369 124	161 369 144	167 369 124	167 369 144	175 369 144
65	75	2 ½	161 369 125	161 369 145	167 369 125	167 369 145	175 369 145
80	90	3	161 369 126	161 369 146	167 369 126	167 369 146	175 369 146
100	110	4	161 369 127	161 369 147	167 369 127	167 369 147	175 369 147
125	140	5	161 369 128	161 369 148	167 369 128	167 369 148	175 369 148
150	160	6	161 369 129	161 369 149	167 369 129	167 369 149	175 369 149
200	225	8	161 369 130	161 369 150	167 369 130	167 369 150	175 369 150
250	280	10	161 369 131	161 369 151	167 369 131	167 369 151	175 369 151
300	315	12	161 369 132	161 369 152	167 369 132	167 369 152	175 369 152



Spring (3)

DN (mm)	d (mm)	Size (inch)	V4A Code	Hastelloy C Code
32	40	1 ¼	161 484 900	161 484 912
40	50	1 ½	161 484 901	161 484 913
50	63	2	161 484 902	161 484 914
65	75	2 ½	161 484 903	161 484 915
80	90	3	161 484 904	161 484 916
100	110	4	161 484 905	161 484 917
125	140	5	161 484 906	161 484 918
150	160	6	161 484 907	161 484 919
200	225	8	161 484 908	161 484 920
250	280	10	161 484 909	161 484 921
300	315	12	161 484 910	161 484 922



Seal set (1)

DN (mm)	d (mm)	Size (inch)	EPDM Code	FKM Code
32	40	1 ¼		161 484 887
40	50	1 ½	161 484 876	161 484 888
50	63	2	161 484 877	161 484 889
65	75	2 ½	161 484 878	161 484 890
80	90	3	161 484 879	161 484 891
100	110	4	161 484 880	161 484 892
125	140	5	161 484 881	161 484 893
150	160	6	161 484 882	161 484 894
200	225	8	161 484 883	161 484 895
250	280	10	161 484 884	161 484 896
300	315	12	161 484 885	161 484 897



For further information on accessories, refer to the online product catalog at www.gfps.com

Mobile apps and online tools to support configuration and calculation at
www.gfps.com/tools